1 Table of Contents

Table of Contents

1 Table of Contents 1

1.1 Revision History 1
2 Instant Mesh 2

2.1 Things you need 2
3 Instant AP Configuration 3

3.1 Normal Mesh Operation 4
3.2 Automatic Mesh Portal Selection 7
3.3 Mesh Profile Parameters 9
3.4 Reconnecting the Wired Port 10
3.5 Ethernet Bridging 10
4 Instant Mesh Cluster 15

4.1 Instant Cluster Manual Configuration 16
4.2 Multiple Mesh Clusters and Failover 17
4.3 Mesh Radio selection 22
4.4 Mesh Links and Fast Roaming 23
4.5 Mesh Fine Tuning 24
4.6 Show Cluster Commands 24

1.1 Revision History

DATE	VERSION	EDITOR	CHANGES
11 Dec 2021	0.1	Ariya Parsamanesh	Initial creation
14 Jan 2022	0.2	Ariya Parsamanesh	Addition of Mesh cluster

2 Instant Mesh

Aruba Instant APs (IAP) uses Wi-Fi mesh technology to extend Wi-Fi coverage for outdoor/ indoor environments. Instant Mesh network must have at least one valid uplink to provide mesh functionality. This uplink can either be wired or 3G/4G connection. As soon as an IAP has a valid uplink, it functions as a Mesh Portal, and IAP without an Ethernet link functions as a Mesh Point. Now if we have 2x IAPs with valid uplink connections this makes them both Mesh Portal. There is redundancy in the mesh network, and most mesh points try to mesh directly with one of the two portals. The selection is based on the actual deployment and RF environment. But generally, this happens automatically.

Here are the new enhancements.

- Role Assignment enhancement for Mesh point, IAP will check if the Eth0 is up and operational as it sends loop detection packets. If the Eth0 is up and operational then only will the mesh point reboots and becomes a mesh portal.
- We can now have more than one mesh cluster for IAP swarm and manually configure mesh clusters and assign it to specific IAPs
- Mesh cluster for fast moving environments with fast roaming

Here is the lab set-up to demonstrating three scenarios, showing the configuration steps for setting up

1. Mesh link with the default mesh cluster and enabling E0 bridging.

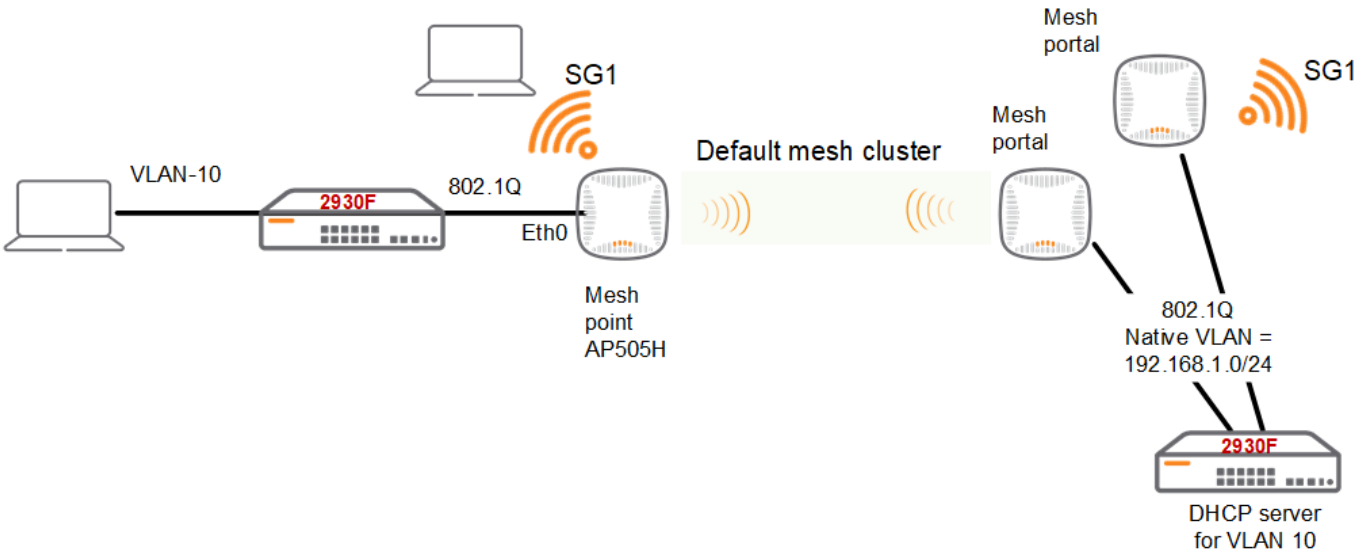

2. Manual mesh cluster for a specific Mesh portal/point with E0 bridging.
3. Manual mesh cluster for a specific Mesh portal/point with E0 bridging and backup mesh cluster.

2.1 Things you need

- Aruba Instant version 8.8.0.0 or later
- 3x IAPs in an existing Instant Cluster
- A Layer three switch and some Wi-Fi and wired clients

3 Instant AP Configuration

As long as IAPs are part of an Instant cluster, they automatically can connect to the nearest IAP to create a wireless mesh link using their 5GHz radio as a backhaul link. The mesh operation is only supported on the IAPs with dual radios. Generally, an IAP with an active Ethernet link is a Mesh Portal and acts like a gateway between wireless mesh and the main wired LAN.

The IAP that connects to Mesh portal using its Wi-Fi radio is called Mesh Point. Then the mesh point provides wireless services to its clients like any other IAP.

In an Instant mesh network, the maximum

- Hop count is 2,
- Number of mesh points per mesh portal is 8.

On dual-radio Instant APs, the 2.4 GHz radio is always used for client traffic, while the 5 GHz radio is always used for both mesh-backhaul and client traffic. If you anticipate large number of 5G clients on the same radio that is used for mesh backhaul, it is advisable to separate it out so that the 5G radio is dedicated to the mesh backhaul. You can separate it out using zones and manual mesh cluster configuration shown later in this guide.

Here we have 3x IAPs in a cluster as shown below. At this stage both are connected to the LAN.

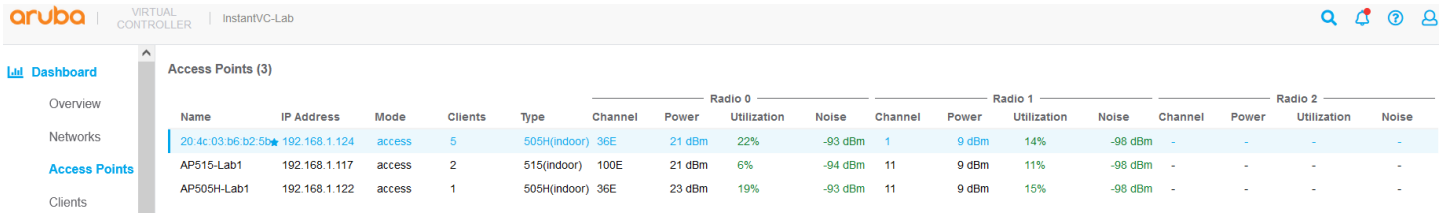

Mesh networks requires that extended-ssid to be turned off.

```
20:4c:03:b6:b2:5b# sh swarm state

AP Swarm State           :swarm_config_sync_complete
mesh auto eth0 bridging  :no
Config in flash          :yes
factory SSID in flash :no
extended-ssid configured :no
extended-ssid active     :no
advanced-zone configured :no
Factory default status   :no
Source of system time    :NTP server
Config load cnt          :1
VC Channel index         :1
IDS Client Gateway Detect :yes
Config Init success cnt for heartbeat   :0
Config Init success cnt for register    :0
Config Init skipping cnt for heartbeat  :0
Config Init skipping cnt for register   :0
Config Init last success reason   :N/A
Config Init last success time     :N/A
Radio down state         :0x0 / 0x0 / 0x0
Thermal Protect state    :None
6gHz VAP numbers         :0 / 0
20:4c:03:b6:b2:5b#
```

Here is where we need to disable extended SSID

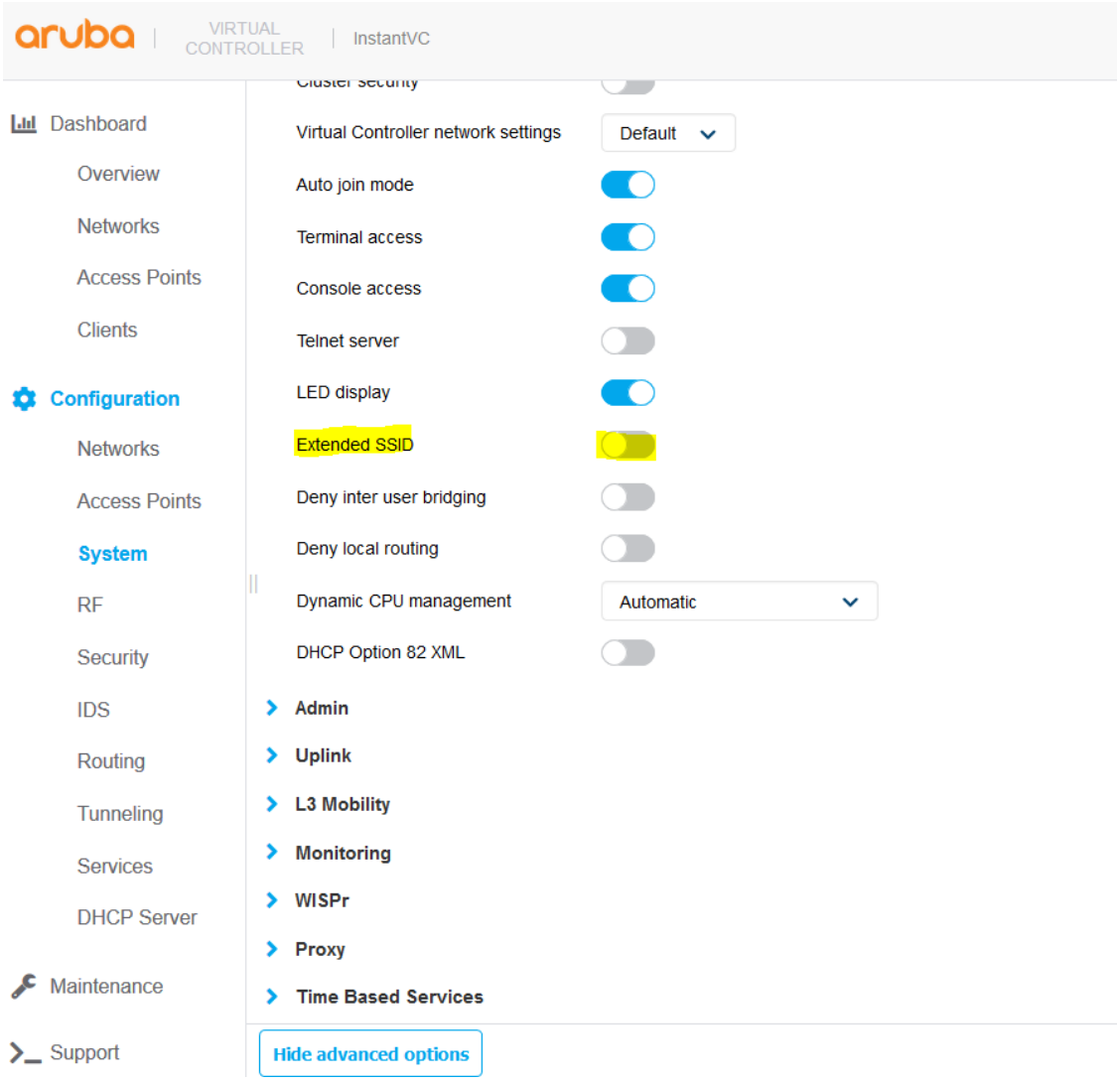

When you make this change you need to reboot the APs for this to take effect.

3.1 Normal Mesh Operation

Now I have disconnected the AP505H-Lab1 from the LAN switch and is being powered up by an adapter. Once the IAP is rebooted they will automatically try mesh functionality since their Eth0 is not connected.

This command is executed on the Instant conductor that is Mesh portal.

```
20:4c:03:b6:b2:5b# sh ap mesh link

Neighbor list
-------------
Radio  MAC                AP Name      Portal             Channel  Band  Age  Hops  Cost  Relation
Flags  RSSI  Rate Tx/Rx  A-Req  A-Resp  A-Fail  HT-Details    Cluster ID
-----  ---               -------      ------              -------  ----  ---  ----  ----  -----------------
-----  ----  ----------  -----  ------  ------  ----------    ----------
0      d0:d3:e0:b2:41:70  AP505H-Lab1  d0:d3:e0:b2:2a:91  36E      5GHz  0    1     1.00  C 7m:11s
ELK    29    612/544     1      1       0       HE-80MHz-2ss  b4afc01b0ce08dcc578432086842f21

Total count: 1, Children: 1
Relation: P = Parent; C = Child; N = Neighbor; B = Denylisted-neighbor
Flags: R = Recovery-mode; S = Sub-threshold link; D = Reselection backoff; F = Auth-failure; H = High
Throughput; V = Very High Throughput, E= High efficient, L = Legacy allowed
       K = Connected; U = Upgrading; G = Descendant-upgrading; Z = Config pending; Y = Assoc-resp/Auth pending
       a = SAE Accepted; b = SAE Denylisted-neighbour; e = SAE Enabled; u = portal-unreachable; o = opensystem;
m = Mobility Enabled

20:4c:03:b6:b2:5b#
```

And this is the corresponding command on the Mesh Point

```
AP505H-Lab1# sh ap mesh link

Neighbor list
-------------
Radio  MAC                AP Name            Portal  Channel  Band  Age  Hops  Cost  Relation
Flags  RSSI  Rate Tx/Rx  A-Req  A-Resp  A-Fail  HT-Details    Cluster ID
-----  ---   ----------  -----  ------  ------  ----------    ----------
0      d0:d3:e0:b2:2a:91  20:4c:03:b6:b2:5b  Yes     36E       5GHz  0    0     1.00  P 8m:49s
ELK    28    612/612     2      1       1       HE-80MHz-2ss  b4afc01b0ce08dcc578432086842f21

Total count: 1, Children: 0
Relation: P = Parent; C = Child; N = Neighbor; B = Denylisted-neighbor
Flags: R = Recovery-mode; S = Sub-threshold link; D = Reselection backoff; F = Auth-failure; H = High
Throughput; V = Very High Throughput, E= High efficient, L = Legacy allowed
        K = Connected; U = Upgrading; G = Descendant-upgrading; Z = Config pending; Y = Assoc-resp/Auth pending
        a = SAE Accepted; b = SAE Denylisted-neighbour; e = SAE Enabled; u = portal-unreachable; o = opensystem;
m = Mobility Enabled

AP505H-Lab1#
```

Here is the WebUI view, you can see we have two Mesh Portals and one Mesh point APs.

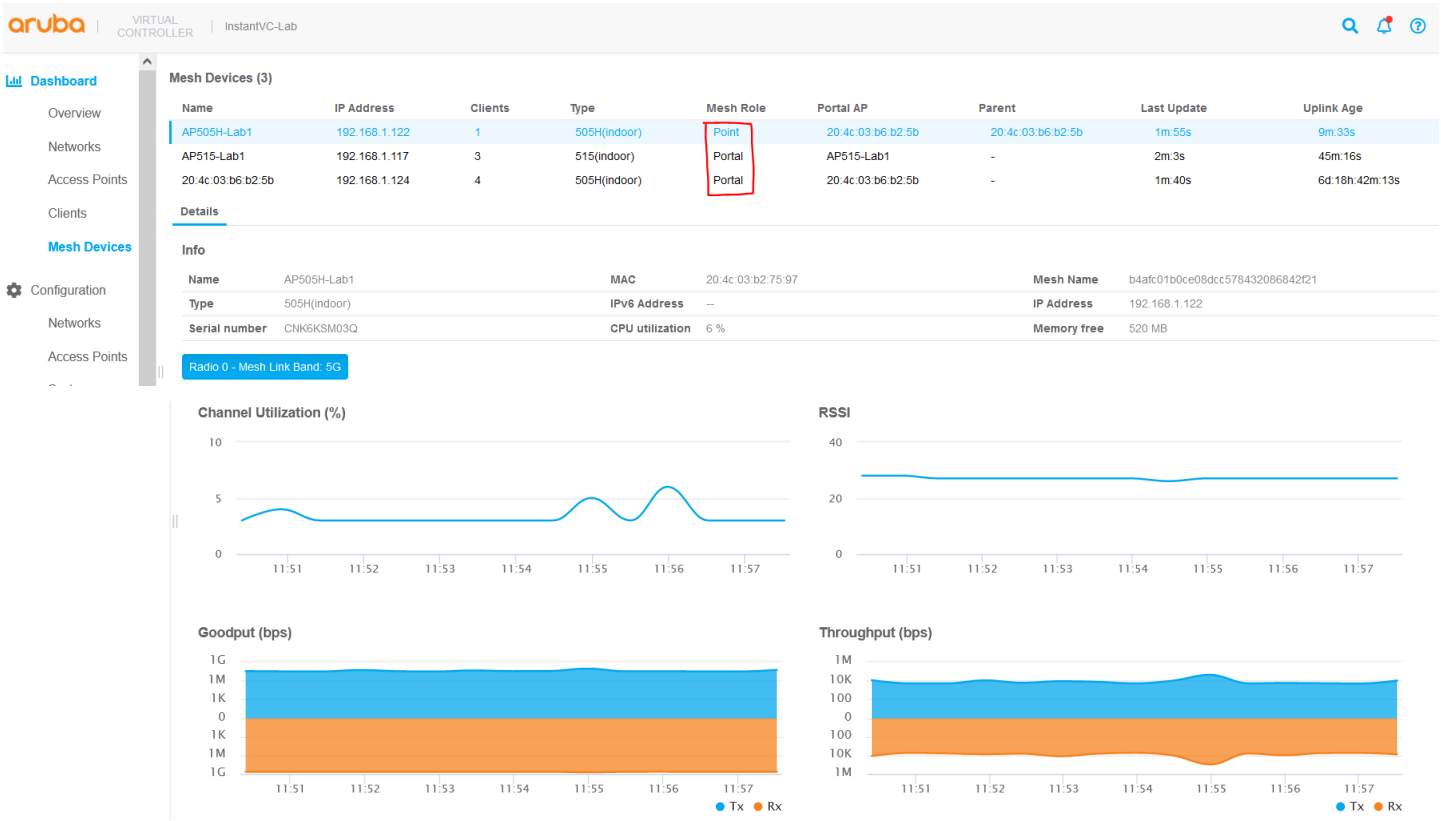

We see that the mesh link is on 5G radio. There are other mesh commands as well, like mesh cluster topology. These commands are run on the Virtual controller (VC).

```
20:4c:03:b6:b2:5b# sh ap mesh cluster topology

Mesh Cluster name: b4afc01b0ce08dcc578432086842f21
-------------------------------------------------
Name               AP Type  Mesh Role  IP Address     Portal AP          Radio ID  Radio Mode  BSSID
Parent AP          Path Cost  Node Cost  Link Cost  Hop Count  Rate Tx/Rx  RSSI  Last Update  Uplink Age
Children Num  Children List
----               -------  ---------  ----------     ---------          --------  ----------  -----
---------          ---------  ---------  ---------  ---------  ----------  ----  ----------  ----------
----------  -------------
AP505H-Lab1        AP-505H  Point      192.168.1.122  20:4c:03:b6:b2:5b  0         MPC (AX)    d0:d3:e0:b2:41:71
20:4c:03:b6:b2:5b  1          0          0          1          612/612     28    25s         10m:34s          0
-
AP515-Lab1         AP-515   Portal     192.168.1.117  AP515-Lab1         0         MPP (AX)    9c:8c:d8:12:b3:11
-                  -          -          -          -          -           -     34s         46m:19s          0
-
```

```
20:4c:03:b6:b2:5b  AP-505H  Portal     192.168.1.124  20:4c:03:b6:b2:5b  0         MPP (AX)    d0:d3:e0:b2:2a:91
-                  -        -          -          -          -          -     9s          6d:18h:43m:16s  1
AP505H-Lab1

Total APs: 3
MPP: portal's radio. MPC: point's radio with active uplink. MPA: point's radio without active uplink.
(N): 11N Enabled. (AC): 11AC Enabled. (AD): 11AD Enabled. (AX): 11AX Enabled. For Portals 'Uplink Age' equals
uptime.

20:4c:03:b6:b2:5b#
```

Now when we login to IAP505H-Lab1 is a member to the VC, the mesh link is up.

```
AP505H-Lab1# sh ap mesh link

Neighbor list
-------------
Radio  MAC                AP Name            Portal  Channel  Band  Age  Hops  Cost  Relation
Flags  RSSI  Rate Tx/Rx  A-Req  A-Resp  A-Fail  HT-Details    Cluster ID
-----  ---                -------            ------  -------  ----  ---  ----  ----  -----------------        --
---  ----  ----------  -----  ------  ------  ----------    ----------
0      d0:d3:e0:b2:2a:91  20:4c:03:b6:b2:5b  Yes     36E      5GHz  0    0     1.00  P 12m:51s
ELK    29    544/612     2      1       1       HE-80MHz-2ss  b4afc01b0ce08dcc578432086842f21

Total count: 1, Children: 0
Relation: P = Parent; C = Child; N = Neighbor; B = Denylisted-neighbor
Flags: R = Recovery-mode; S = Sub-threshold link; D = Reselection backoff; F = Auth-failure; H = High
Throughput; V = Very High Throughput, E= High efficient, L = Legacy allowed
        K = Connected; U = Upgrading; G = Descendant-upgrading; Z = Config pending; Y = Assoc-resp/Auth pending
        a = SAE Accepted; b = SAE Denylisted-neighbour; e = SAE Enabled; u = portal-unreachable; o = opensystem;
m = Mobility Enabled

AP505H-Lab1#
```

Note in this case the RSSI value is 29 and A-Req/A-Resp/A-Fail columns which provide the number of association requests from clients; number of association responses from the mesh node and number of association failures.

Also note that the IP address of the IAP505H-Lab1 is from the DHCP server over the wireless backhaul.

```
AP505H-Lab1# sh ip interface brief
Interface                          IP Address / IP Netmask       Admin  Protocol
br0                             192.168.1.122 / 255.255.255.0    up     up
br0.3333                           172.31.9.1 / 255.255.255.0    up     up
AP505H-Lab1#
```

And this Mesh point also has a wireless client that is connected on the 5GHz radio.

```
AP505H-Lab1# sh clients

Client List
-----------
Name          IP Address     MAC Address        OS      ESSID  Access Point  Channel  Type  Role
IPv6 Address                              Signal    Speed (mbps)
----          ----------     -----------        --      -----  ------------  -------  ----  ----  -
-----------                              ------    ------------
Mariana-ENVY  192.168.1.127  18:56:80:16:c3:d5  Win 10  SG1    AP505H-Lab1   100E     AC    SG1
fd14:5f94:8156:2600:7c4c:b338:3091:e430  47(good)  866(good)
Number of Clients    :1
Info timestamp       :12712
```

So, the backhaul mesh point on 5GHz radio also support client connectivity

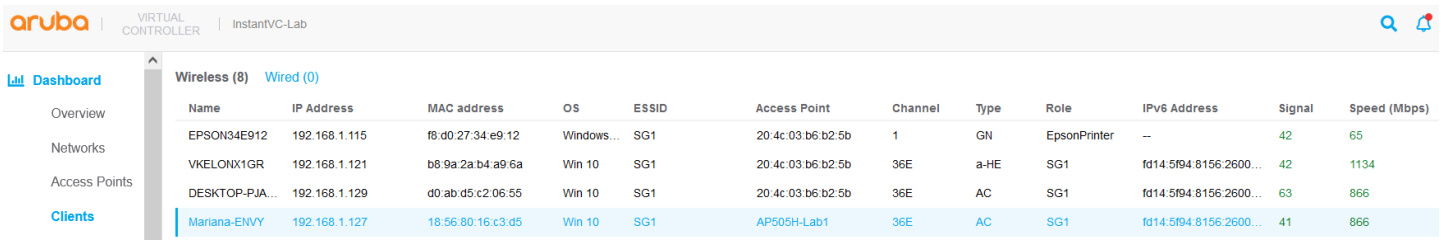

3.2 Automatic Mesh Portal Selection

Instant mesh also provide automatic Mesh portal selection. In our setup since we have 2x mesh portals, the system automatically selects the better mesh portal.

Here we see that AP505H-Lab1 which is our mesh point that is connected to the VC because it has a better RSSI.

```
AP505H-Lab1# sh ap mesh link

Neighbor list
-------------
Radio  MAC                AP Name            Portal  Channel  Band  Age  Hops  Cost  Relation
Flags  RSSI  Rate Tx/Rx  A-Req  A-Resp  A-Fail  HT-Details    Cluster ID
-----  ---               -------            ------  -------  ----  ---  ----  ----  ------------------        --
---  ----  ----------  -----  ------  ------  ----------    ----------
0      d0:d3:e0:b2:2a:91  20:4c:03:b6:b2:5b  Yes     36E      5GHz  0    0     1.00  P 15m:55s
ELK    27    612/612     2      1       1       HE-80MHz-2ss  b4afc01b0ce08dcc578432086842f21

Total count: 1, Children: 0
Relation: P = Parent; C = Child; N = Neighbor; B = Denylisted-neighbor
Flags: R = Recovery-mode; S = Sub-threshold link; D = Reselection backoff; F = Auth-failure; H = High
Throughput; V = Very High Throughput, E= High efficient, L = Legacy allowed
        K = Connected; U = Upgrading; G = Descendant-upgrading; Z = Config pending; Y = Assoc-resp/Auth pending
        a = SAE Accepted; b = SAE Denylisted-neighbour; e = SAE Enabled; u = portal-unreachable; o = opensystem;
m = Mobility Enabled

AP505H-Lab1#
```

Here is how the Mesh Point AP keeps track of the best Mesh Portal through its neighbour table

```
AP505H-Lab1# sh ap mesh neighbours

Neighbor list
-------------
Radio  MAC                AP Name            Portal  Channel  Band  Age  Hops  Cost  Relation
Flags  RSSI  Rate Tx/Rx  A-Req  A-Resp  A-Fail  HT-Details    Cluster ID
-----  ---               -------            ------  -------  ----  ---  ----  ----  ------------------
0      d0:d3:e0:b2:2a:91  20:4c:03:b6:b2:5b  Yes     100E     5GHz  0    0     1.00  P 3h:30m:24s
ELK    24    680/612     4      4       0       HE-80MHz-2ss  b4afc01b0ce08dcc578432086842f21
0      9c:8c:d8:12:b3:11  AP515-Lab1         Yes     100E     5GHz  0    0     0.00  N 21m:30s
ELK    16    -           0      0       0       HE-80MHz-4ss  b4afc01b0ce08dcc578432086842f21

Total count: 2, Children: 0
Relation: P = Parent; C = Child; N = Neighbor; B = Denylisted-neighbor
Flags: R = Recovery-mode; S = Sub-threshold link; D = Reselection backoff; F = Auth-failure; H = High
Throughput; V = Very High Throughput, E= High efficient, L = Legacy allowed
        K = Connected; U = Upgrading; G = Descendant-upgrading; Z = Config pending; Y = Assoc-resp/Auth pending
        a = SAE Accepted; b = SAE Denylisted-neighbour; e = SAE Enabled; u = portal-unreachable; o = opensystem;
m = Mobility Enabled

AP505H-Lab1#
```

The AP515-Lab1 has lower RSSI value and hence not been selected.

Checking the mesh counters on the mesh point shows the change record, look for previous portals.

```
AP505H-Lab1# sh ap mesh counters

Mesh Packet Counters
--------------------
Interface  Echo Sent  Echo Recv  Probe Req  Probe Resp  Assoc Req  Assoc Resp  Assoc Fail  Link
up/down  Resel.  Switch  Other Mgmt
---------  ---------  ---------  ---------  ----------  ---------  ----------  ----------  --------
----  ------  ------  ----------
Parent     0          0          0          0           0          0           0           0
-       -       0
Child      12852      12920      71         72(72 HT)   4(4 HT)    4 (4 HT)    0           0
0       0       143354

Received Packet Statistics: Total 297862, Mgmt 143964 (dropped non-mesh 0), Data 25757 (dropped
unassociated 0)HT: pns=0 ans=0 pnr=72 ars=4 arr=0 anr=4

Recovery Profile Usage Counters
-------------------------------
Item                          Value
----                          -----
Enter recovery mode           0
Exit recovery mode            0
```

```
Total connections to switch  0

Mesh loop-prevention Sequence No.:846041
Mesh timer ticks:12951

Change-record: HT-link renegotiation, linkdown:3h:34m:39s, linkup:3h:34m:39s, previous
portal:d0:d3:e0:b2:2a:91, previous parent: d0:d3:e0:b2:2a:91
Scan-summary:34:1 36:s 38:1 40:s 42:1 44:s 46:1 48:0 52:0 56:0 60:s 64:s 100:1 104:s 108:s 112:s
116:s 120:1 124:1 128:1 132:s 136:s 140:s 144:1 149:s 153:s 157:s 161:s 165:s 169:1 173:1
   scan-key: n:not-set,i:invalid,b:denylisted,s:set,<number>:probe-resp-cnt.
AP505H-Lab1#
```

Now we move the AP515-Lab1 to a better location to improve its RSSI.

```
AP505H-Lab1# sh ap mesh neighbours

Neighbor list
-------------
Radio  MAC                AP Name           Portal  Channel  Band  Age  Hops  Cost  Relation
Flags  RSSI  Rate Tx/Rx  A-Req  A-Resp  A-Fail  HT-Details    Cluster ID
-----  ---               -------           ------  -------  ----  ---  ----  ----  -----------------        --
---  ----  ----------  -----  ------  ------  ----------    ----------
0      d0:d3:e0:b2:2a:91  20:4c:03:b6:b2:5b  Yes     100E     5GHz  0    0     1.00  P 4h:7m:0s
ELK    25    612/612     4      4       0       HE-80MHz-2ss  b4afc01b0ce08dcc578432086842f21
0      9c:8c:d8:12:b3:11  AP515-Lab1        Yes     100E     5GHz  0    0     0.00  N 2m:8s
ELK    32    -           0      0       0       HE-80MHz-4ss  b4afc01b0ce08dcc578432086842f21

Total count: 2, Children: 0
Relation: P = Parent; C = Child; N = Neighbor; B = Denylisted-neighbor
Flags: R = Recovery-mode; S = Sub-threshold link; D = Reselection backoff; F = Auth-failure; H = High
Throughput; V = Very High Throughput, E= High efficient, L = Legacy allowed
        K = Connected; U = Upgrading; G = Descendant-upgrading; Z = Config pending; Y = Assoc-resp/Auth pending
        a = SAE Accepted; b = SAE Denylisted-neighbour; e = SAE Enabled; u = portal-unreachable; o = opensystem;
m = Mobility Enabled

AP505H-Lab1#
```

But it is still connected to the first Mesh-Portal. The system tries to avoid mesh link flapping so the RSSI value of the existing Mesh Portal should be around 12 for the neighbour to be considered. We'll execute this command a few times.

```
AP505H-Lab1# sh ap mesh  neighbours

Neighbor list
-------------
Radio  MAC                AP Name           Portal  Channel  Band  Age  Hops  Cost  Relation
Flags  RSSI  Rate Tx/Rx  A-Req  A-Resp  A-Fail  HT-Details    Cluster ID
-----  ---               -------           ------  -------  ----  ---  ----  ----  -----------------        --
---  ----  ----------  -----  ------  ------  ----------    ----------
0      d0:d3:e0:b2:2a:91  20:4c:03:b6:b2:5b  Yes     100E     5GHz  0    0     1.00  P 4h:24m:28s
ELK    23    680/680     4      4       0       HE-80MHz-2ss  b4afc01b0ce08dcc578432086842f21
0      9c:8c:d8:12:b3:11  AP515-Lab1        Yes     100E     5GHz  0    0     0.00  N 19m:36s
ELK    29    -           0      0       0       HE-80MHz-4ss  b4afc01b0ce08dcc578432086842f21

Total count: 2, Children: 0
Relation: P = Parent; C = Child; N = Neighbor; B = Denylisted-neighbor
Flags: R = Recovery-mode; S = Sub-threshold link; D = Reselection backoff; F = Auth-failure; H = High
Throughput; V = Very High Throughput, E= High efficient, L = Legacy allowed
        K = Connected; U = Upgrading; G = Descendant-upgrading; Z = Config pending; Y = Assoc-resp/Auth pending
        a = SAE Accepted; b = SAE Denylisted-neighbour; e = SAE Enabled; u = portal-unreachable; o = opensystem;
m = Mobility Enabled


AP505H-Lab1# sh ap mesh  neighbours

Neighbor list
-------------
Radio  MAC                AP Name           Portal  Channel  Band  Age  Hops  Cost  Relation
Flags  RSSI  Rate Tx/Rx  A-Req  A-Resp  A-Fail  HT-Details    Cluster ID
-----  ---               -------           ------  -------  ----  ---  ----  ----  -----------------        --
---  ----  ----------  -----  ------  ------  ----------    ----------
0      9c:8c:d8:12:b3:11  AP515-Lab1        Yes     100E     5GHz  0    0     1.00  P 11s
DELK   29    1020/1020   1      1       0       HE-80MHz-4ss  b4afc01b0ce08dcc578432086842f21
0      d0:d3:e0:b2:2a:91  20:4c:03:b6:b2:5b  Yes     100E     5GHz  0    0     1.00  N 11s
ELK    13    -           4      4       0       HE-80MHz-2ss  b4afc01b0ce08dcc578432086842f21

Total count: 2, Children: 0
Relation: P = Parent; C = Child; N = Neighbor; B = Denylisted-neighbor
```

```
Flags: R = Recovery-mode; S = Sub-threshold link; D = Reselection backoff; F = Auth-failure; H = High
Throughput; V = Very High Throughput, E= High efficient, L = Legacy allowed
        K = Connected; U = Upgrading; G = Descendant-upgrading; Z = Config pending; Y = Assoc-resp/Auth pending
        a = SAE Accepted; b = SAE Denylisted-neighbour; e = SAE Enabled; u = portal-unreachable; o = opensystem;
m = Mobility Enabled

AP505H-Lab1#
```

Show once the backoff timer expires the new Mesh-Portal is selected.

```
AP505H-Lab1# sh ap mesh  neighbours

Neighbor list
-------------
Radio  MAC                AP Name            Portal  Channel  Band  Age  Hops  Cost  Relation
Flags  RSSI  Rate Tx/Rx  A-Req  A-Resp  A-Fail  HT-Details    Cluster ID
-----  ---               -------            ------  -------  ----  ---  ----  ----  -----------------        --
---  ----  ----------  -----  ------  ------  ----------    ----------
0      9c:8c:d8:12:b3:11  AP515-Lab1         Yes     100E     5GHz  0    0     1.00  P 10m:0s
ELK    29    1020/1020   1      1       0       HE-80MHz-4ss  b4afc01b0ce08dcc578432086842f21
0      d0:d3:e0:b2:2a:91  20:4c:03:b6:b2:5b  Yes     100E     5GHz  0    0     0.00  N 10m:0s
ELK    14    -           4      4       0       HE-80MHz-2ss  b4afc01b0ce08dcc578432086842f21

Total count: 2, Children: 0
Relation: P = Parent; C = Child; N = Neighbor; B = Denylisted-neighbor
Flags: R = Recovery-mode; S = Sub-threshold link; D = Reselection backoff; F = Auth-failure; H = High
Throughput; V = Very High Throughput, E= High efficient, L = Legacy allowed
        K = Connected; U = Upgrading; G = Descendant-upgrading; Z = Config pending; Y = Assoc-resp/Auth pending
        a = SAE Accepted; b = SAE Denylisted-neighbour; e = SAE Enabled; u = portal-unreachable; o = opensystem;
m = Mobility Enabled
AP505H-Lab1#
```

Now checking the mesh link status and we'll see that AP515-Lab1 is selected.

```
AP505H-Lab1# sh ap mesh link

Neighbor list
-------------
Radio  MAC                AP Name     Portal  Channel  Band  Age  Hops  Cost  Relation                Flags
RSSI  Rate Tx/Rx  A-Req  A-Resp  A-Fail  HT-Details    Cluster ID
-----  ---               -------     ------  -------  ----  ---  ----  ----  -----------------       -----  --
--  ----------  -----  ------  ------  ----------    ----------
0      9c:8c:d8:12:b3:11  AP515-Lab1  Yes     100E     5GHz  0    0     1.00  P 10m:38s               ELK    29
1020/1020   1      1       0       HE-80MHz-4ss  b4afc01b0ce08dcc578432086842f21

Total count: 1, Children: 0
Relation: P = Parent; C = Child; N = Neighbor; B = Denylisted-neighbor
Flags: R = Recovery-mode; S = Sub-threshold link; D = Reselection backoff; F = Auth-failure; H = High
Throughput; V = Very High Throughput, E= High efficient, L = Legacy allowed
        K = Connected; U = Upgrading; G = Descendant-upgrading; Z = Config pending; Y = Assoc-resp/Auth pending
        a = SAE Accepted; b = SAE Denylisted-neighbour; e = SAE Enabled; u = portal-unreachable; o = opensystem;
m = Mobility Enabled
AP505H-Lab1#
```

And here is the WebUI view.

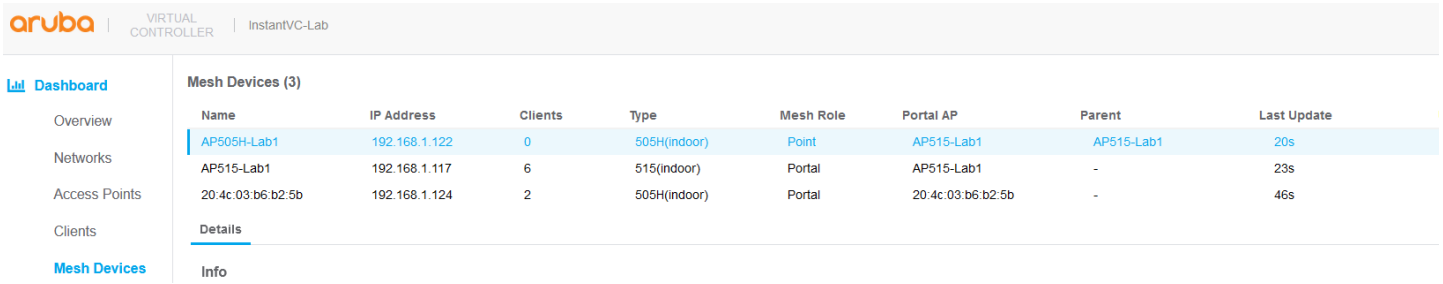

3.3 Mesh Profile Parameters

There is a default mesh profile that is used for all the mesh links. When an AP is a mesh point, it does two types of scans.

1. Uplink scan in which the AP without an uplink connection scans all the channels sequentially to find a Mesh Portal. If a scan fails on a channel, then AP retires based on "max-retries" before moving on to the next channel.

2. Topology scan in which the AP that is already part of a mesh cluster, scans to find a better link. There are three settings that influence this scan
    a. link-threshold
    b. optimize-scan-interval
    c. reselection-mode

Here are the default setting of the mesh profile from the VC.

```
20:4c:03:b6:b2:5b# sh ap mesh config

A Tx Rates                :6,9,12,18,24,36,48,54
Heartbeat Threshold       :10
Link Threshold            :12
Metric Algorithm          :Metric_Distributed_Tree_Rssi
Max Children              :8
Max Hop Count             :2
Mesh Private Vlan         :0
Reselection Mode          :Reselect_Startup_Subthreshold
Prefer Uplink Radio       :No prefer uplink radio
Optimize Scan Interval    :24
Retry Limit               :4
Mobility Beacon Miss Num  :16
20:4c:03:b6:b2:5b#
```

3.4 Reconnecting the Wired Port

Here we'll recon]nect the Ethernet cable from AP505H-Lab1. When we re-connect the Ethernet cable the default behaviour is that the IAP immediately reboots as soon as it senses that the physical interface is up. This is not the best option as the link could be up and the Ethernet network may not be operational.

With Instant 8.4 we have "enhanced-mesh-role-detect" command that sends loop detection packets to check if the Ethernet 0 link is available. This is a CLI command only.

```
20:4c:03:b6:b2:5b#
20:4c:03:b6:b2:5b# conf t
We now support CLI commit model, please type "commit apply" for configuration to take effect.
BLDG-A-ATV1 (config) # enhanced-mesh-role-detect
BLDG-A-ATV1 (config) #
BLDG-A-ATV1# com app
committing configuration...
configuration committed.

20:4c:03:b6:b2:5b#
```

So now with this command when we connect the Ethernet cable to just bring up the interface, the IAP will not reboot immediately unless it sees that the Ethernet network is operations. This really enhances the uptime and functionality of the mesh links.

3.5 Ethernet Bridging

This feature is used to use the Ethernet port of the Mesh Point IAP as a downlink, so you can connect a wired device either on the same VLAN as that of the IAP or on any other VLAN through 802.1Q VLAN trunking. You can do this by simply selecting the AP505H-Lab1 as shown below

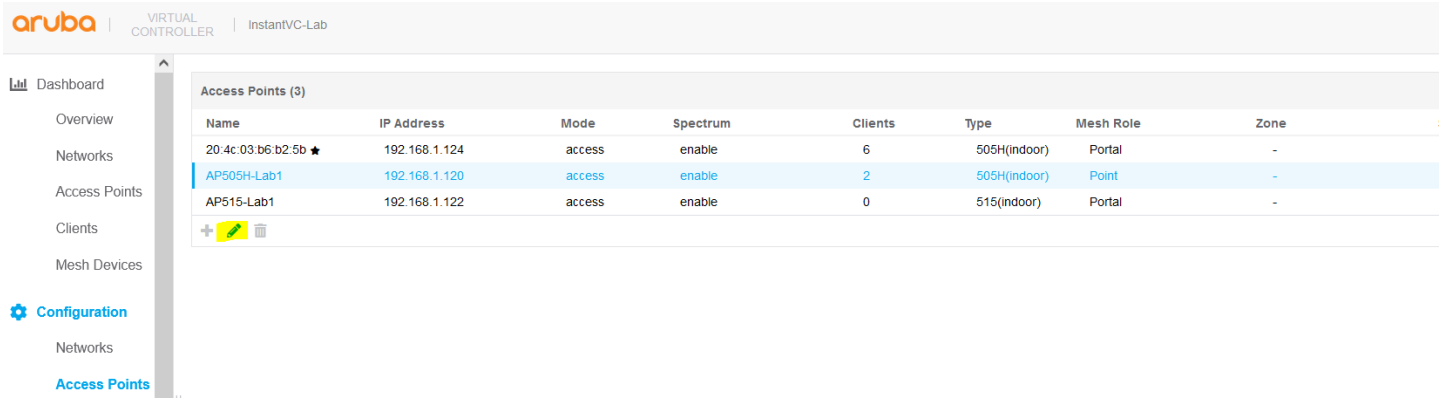

If you re-call this is the Mesh-Point and enabling Eth0 bridging is by setting it to downlink.

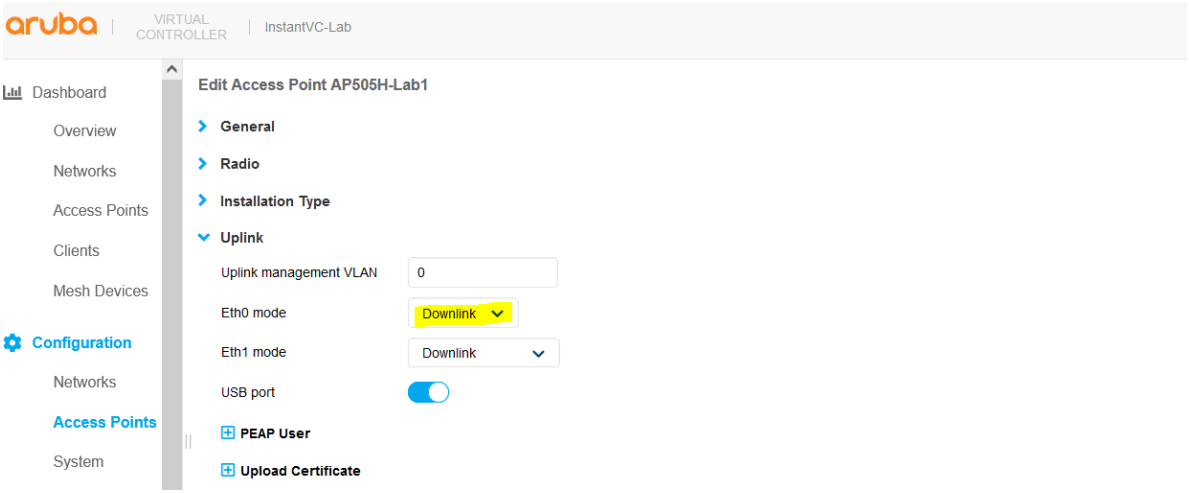

You should then reboot the IAP for this change to take effect. Note that if an IAP is set to Ethernet 0 bridging, it always acts as a mesh point. When an IAP is configured with Eth0 bridging and then rebooted, the E0 bridging will become AP environment setting.

Here you can check the AP environment parameters.

```
AP505H-Lab1# sh ap-env

Antenna Type:Internal
IoT Antenna Type:Internal
Need USB field:Yes
name:AP505H-Lab1
enet0_bridging:1
ap1xuser:InstantAP
ap1xpasswd:274d5d134a80c4ded537657e000f6cbb4801341fea639d54
uap_controller_less:1
enet1_mode:downlink
AP505H-Lab1#
```

Next, we need to configure a network profile for our mesh bridge and assign it to Eth0, this is so that we can have network connectivity across the mesh link. We have called it “Mesh-Bridge”.

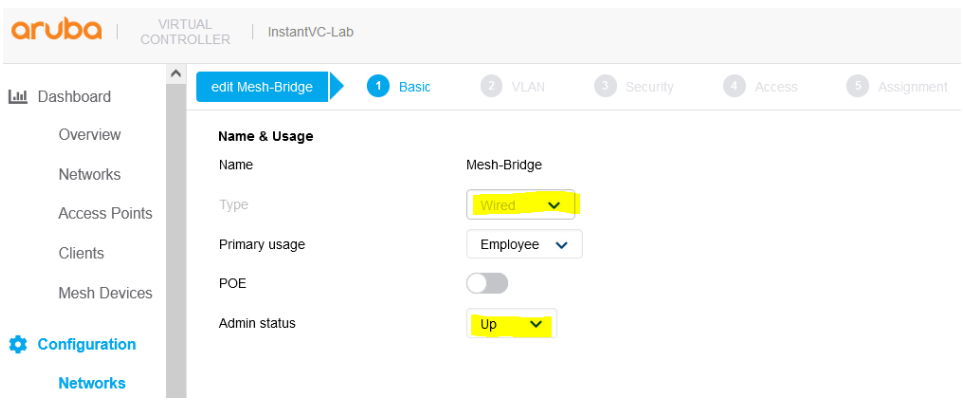

Note that the admin status should be set to Up.

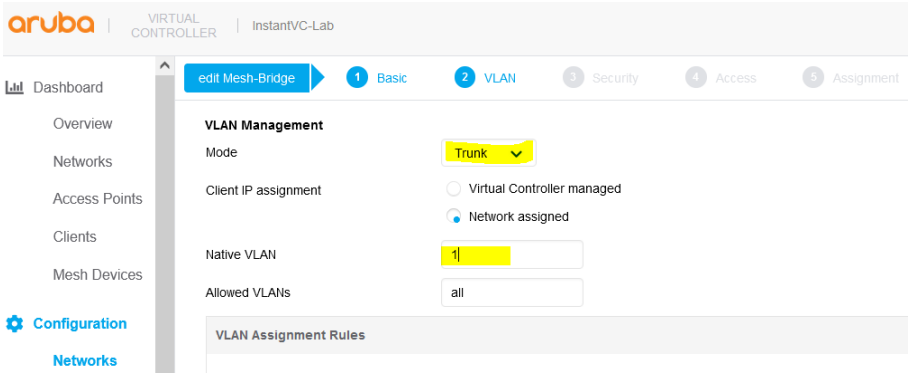

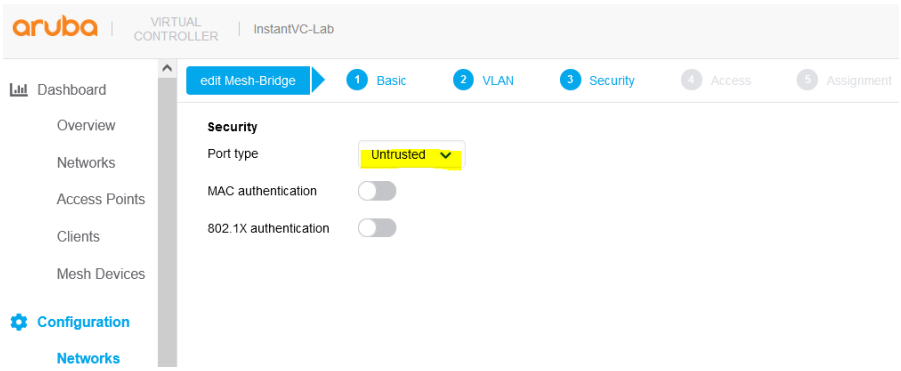

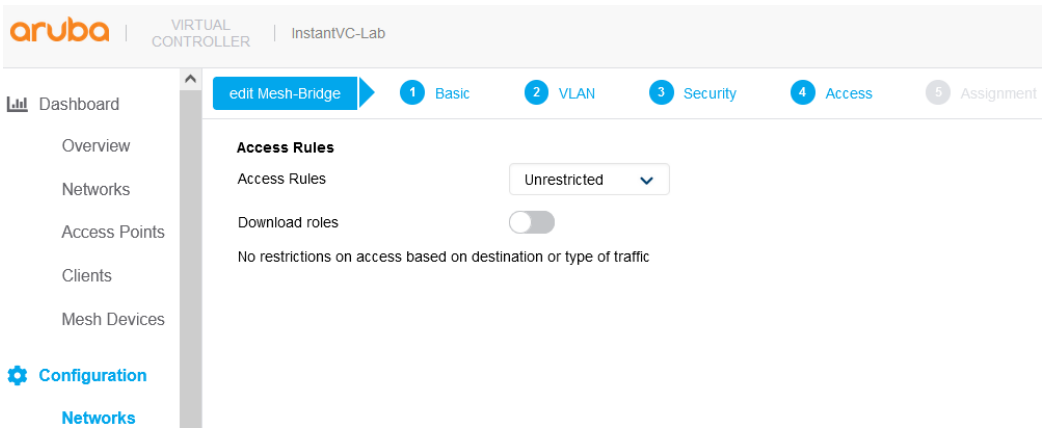

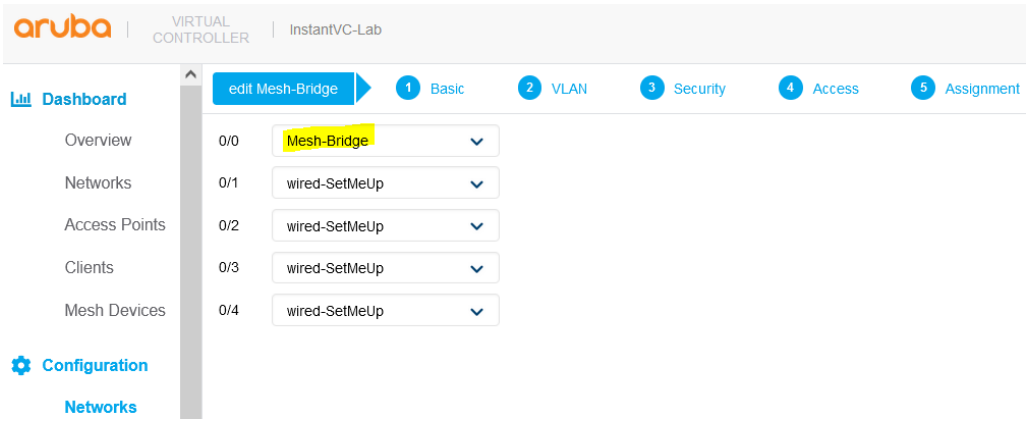

Once you have configured this profile and assigned it to 0/0 as shown above, you can then connect the LAN switch to this Eth0 interface of the Mesh point AP.

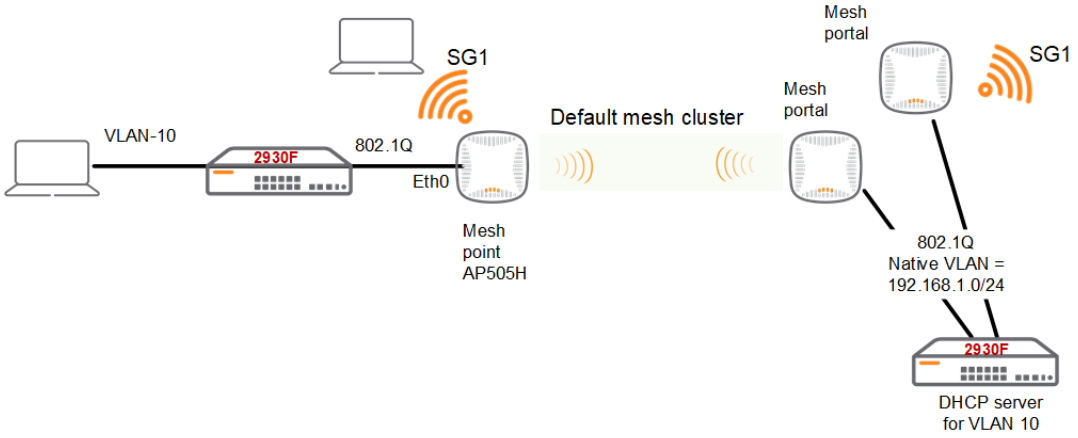

The MAC address of the laptop is F0:DE:F1:64:0A:82

Now you can check the bridging table with this command and should see the MAC address of the device that is connected to the Eth0 port.

```
AP505H-Lab1# show datapath bridge
Datapath Bridge Devices
-----------------------------
Flags: F - source-filter, T - trusted, Q - tagged, I - IP
       S - split-tunnel, B - bridge, M - mesh, P - PPPoE, W - WAN
       C - content-filter, O - corp-access, h - to HAP, f - to FAP
       h - dhcp-redirect b - blocked by STP, H - Hierarchy AP connected

Dev  Name                    VLANs  PVID  ACLs         MTU  FramesRx  FramesTx  Flags
---  ----------------------  -----  ----  -----------  ---  --------  --------  --------
9    eth1                    1      3333  151/0     0  1500         0         0  FB
10   eth2                    1      3333  151/0     0  1500         0         0  FB
11   eth3                    1      3333  151/0     0  1500         0         0  FB
12   eth4                    1      3333  151/0     0  1500         0         0  FB
13   bond0                   4095   1     197/0   106  1500      1043     10756  FQB
22   br0                     0      1     105/0     0  1300      3512         0  FIB
24   mesh0                   4095   1       0/0     0  1500     14452      7633  FTQBM
34   aruba002                1      1     159/0     0  1500      3037      3265  B
35   aruba102                1      1     159/0     0  1500         0         0  B
36   aruba003                1      1     201/0     0  1500         0         0  B
37   aruba103                1      1     201/0     0  1500         0         0  B

Datapath Bridge Table Entries
-----------------------------
Flags: P - Permanent, D - Deny, R - Route, M - Mobile, X - Xsec, A - Auth
AP Flags: X - Awaiting 1X reply, B - Block all non-1X traffic, F - Force bridge role, G - Gateway

      MAC          VLAN  Assigned VLAN  Destination  Flags  AP Flags  Bridge Role ACL
-----------------  ----  -------------  -----------  -----  --------  ---------------
20:4C:03:B2:75:97  3333  3333           local        P                0
20:4C:03:B6:B2:5B  1     1              dev24                         0
B8:9A:2A:B4:A9:6A  1     1              dev34                         0
F8:60:F0:C8:70:E0  10    10             dev24                G        0
F8:60:F0:C8:70:E0  1     1              dev24                         0
20:4C:03:B2:75:97  1     1              local        P                0
20:4C:03:B6:B2:5B  3333  3333           dev24        P                0
DE:CE:95:F5:7A:76  1     1              dev24                         0
D0:D3:E0:B2:41:72  1     1              dev34                         0
9C:8C:D8:C9:2B:30  1     1              dev24                         0
F0:DE:F1:64:0A:82  10    10             dev13                         0
14:5F:94:81:56:26  1     1              dev24                G        0
F8:60:F0:C8:70:F1  10    10             dev24                         0
F8:60:F0:C8:70:F1  1     1              dev24                         0
9C:20:7B:AB:B5:71  1     1              dev24                         0
D0:AB:D5:C2:06:55  1     1              dev24                         0

AP505H-Lab1#
```

And since we have made the port untrusted, we can see the wired clients with this command. The laptop as shown below is on VLAN 10. (10.10.10.100)

```
AP505H-Lab1# sh clients wired

Wired Client List
-----------------
Name     IP Address    MAC Address         OS       Network  Access Point  Role          IPv6 Address
Speed (mbps)
----     ----------    -----------         --       -------  ------------  ----          ------------  -
-----------
AriyaP   10.10.10.22   f0:de:f1:64:0a:82   Win 10   eth0     AP505H-Lab1   Mesh-Bridge   --            -
         10.10.10.2    b0:5a:da:98:b5:70   NOFP     eth0     AP505H-Lab1   Mesh-Bridge   --            -
Info timestamp      :3672

AP505H-Lab1#
```

And the other MAC addresses are the wireless devices on the mesh point

```
AP505H-Lab1# sh clients

Client List
-----------
Name         IP Address     MAC Address         OS      ESSID  Access Point  Channel  Type  Role
IPv6 Address                              Signal    Speed (mbps)
----         ----------     -----------         --      -----  ------------  -------  ----  ----  ---
---------                                 ------    ------------

VKELONX1GR   192.168.1.123  b8:9a:2a:b4:a9:6a   Win 10  SG1    AP505H-Lab1   36E      a-HE  SG1
fd14:5f94:8156:2600:11d2:be8d:b7f0:e99f  52(good)  1080(good)
Number of Clients   :1
Info timestamp      :3720

AP505H-Lab1#
```

And Here is the WebUI view, first the wired client

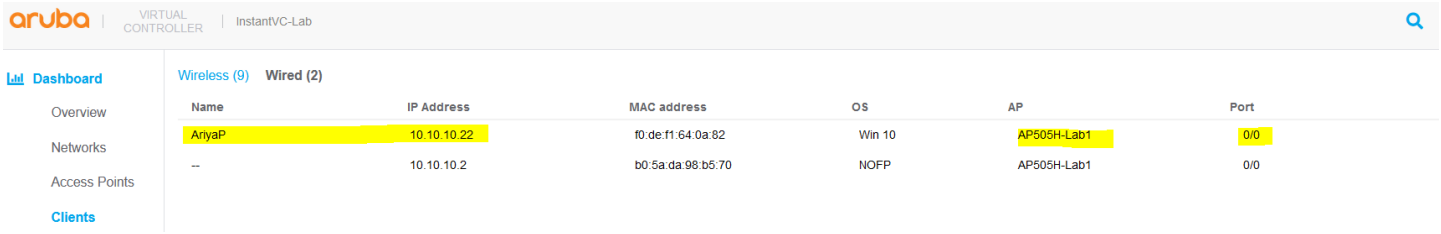

And here is the wireless client on the same AP.

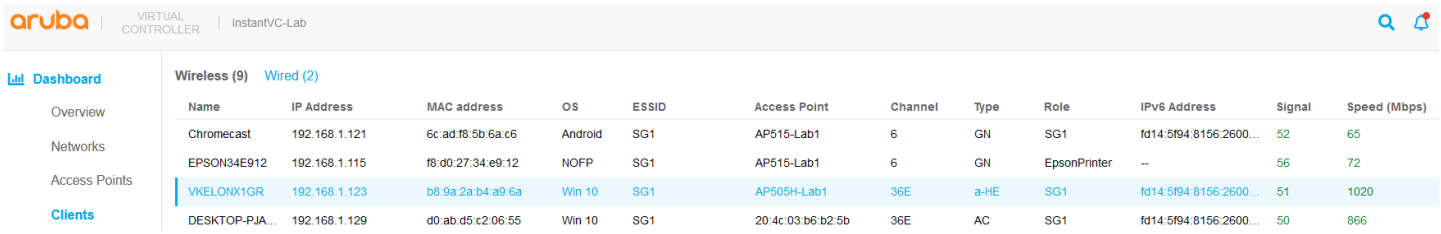

4 Instant Mesh Cluster

By default, Instant automatically generates mesh cluster ID and a password on 5GHz band. All the mesh portal automatically broadcasts a mesh services set identifier/cluster name so that the mesh points can identify it and then connect to it using AES encryption to authenticate to the mesh portals. This is not configurable and happens behind the scenes.

Now with the new Mesh enhancement we can

- Create multiple Mesh cluster
- Support mesh function in standalone mode AP

As per our previous configuration we are still running the default Mesh cluster.

```
20:4c:03:b6:b2:5b# sh ap mesh cluster  topology

Mesh Cluster name: b4afc01b0ce08dcc578432086842f21
--------------------------------------------------
Name               AP Type  Mesh Role  IP Address     Portal AP          Radio ID  Radio Mode
BSSID              Parent AP          Path Cost  Node Cost  Link Cost  Hop Count  Rate Tx/Rx  RSSI
Last Update  Uplink Age      Children Num  Children List
----               -------  ---------  ----------     ---------          --------  ----------  ----
-              ---------          ---------  ---------  ---------  ---------  ----------  ----  ---
--------  ----------      ------------  -------------
AP505H-Lab1        AP-505H  Point      192.168.1.122  20:4c:03:b6:b2:5b  0         MPC (AX)
d0:d3:e0:b2:41:71  20:4c:03:b6:b2:5b  1          0          0          1         1134/1134   42
1m:48s       59m:46s         0             -
AP515-Lab1         AP-515   Portal     192.168.1.117  AP515-Lab1         0         MPP (AX)
9c:8c:d8:12:b3:11  -                  -          -          -          -         -           -
1m:26s       1h:14m:25s      0             -
20:4c:03:b6:b2:5b  AP-505H  Portal     192.168.1.124  20:4c:03:b6:b2:5b  0         MPP (AX)
d0:d3:e0:b2:2a:91  -                  -          -          -          -         -           -
1m:38s       7d:17h:13m:56s  1             AP505H-Lab1

Total APs: 3
MPP: portal's radio. MPC: point's radio with active uplink. MPA: point's radio without active
uplink.
(N): 11N Enabled. (AC): 11AC Enabled. (AD): 11AD Enabled. (AX): 11AX Enabled. For Portals 'Uplink
Age' equals uptime.

20:4c:03:b6:b2:5b#
20:4c:03:b6:b2:5b# sh ap mesh link

Neighbor list
-------------
Radio  MAC                AP Name      Portal             Channel  Band  Age  Hops  Cost  Relation
Flags  RSSI  Rate Tx/Rx  A-Req  A-Resp  A-Fail  HT-Details    Cluster ID
-----  ---               -------      ------             -------  ----  ---  ----  ----  ---------
--------        -----  ----  ----------  -----  ------  ------  ----------    ----------
0      d0:d3:e0:b2:41:70  AP505H-Lab1  d0:d3:e0:b2:2a:91  36E      5GHz  0    1     1.00  C
1h:2m:11s              ELK    47    1134/1134   5      5       0       HE-80MHz-2ss
b4afc01b0ce08dcc578432086842f21

Total count: 1, Children: 1
Relation: P = Parent; C = Child; N = Neighbor; B = Denylisted-neighbor
Flags: R = Recovery-mode; S = Sub-threshold link; D = Reselection backoff; F = Auth-failure; H =
High Throughput; V = Very High Throughput, E= High efficient, L = Legacy allowed
        K = Connected; U = Upgrading; G = Descendant-upgrading; Z = Config pending; Y = Assoc-
resp/Auth pending
        a = SAE Accepted; b = SAE Denylisted-neighbour; e = SAE Enabled; u = portal-unreachable; o
= opensystem; m = Mobility Enabled
20:4c:03:b6:b2:5b#
```

Here you can see that the mesh cluster ID is `b4afc01b0ce08dcc578432086842f21`, you'll notice that this is being broadcasted as a hidden SSID.

4.1 Instant Cluster Manual Configuration

Starting with Instant 8.4.0.0 you can now support multiple mesh clusters. We can do this by manually configuring Mesh cluster name and password. Mesh cluster function is a per-AP setting and must be configured manually. When an IAP boots up, it attempts to find a mesh cluster configuration so when IAP is already configured with a mesh cluster then it will use that otherwise it uses the default mesh cluster.

There is no limit to thenumber of profiles that can be configured.

There are basically three commands

```
To configure the cluster password
c8:b5:ad:cb:ca:e2# mesh-cluster-key <key>

To configure the name in a mesh network:
c8:b5:ad:cb:ca:e2# mesh-cluster-name <name>

To disable mesh functionality in a network:
c8:b5:ad:cb:ca:e2# mesh-disable
```

So we login to our AP505H-Lab1 which is already a Mesh point and execute the following commands.

```
AP505H-Lab1# mesh-cluster-key Aruba123456789
AP505H-Lab1# mesh-cluster-name MeshCluster-89

AP505H-Lab1# sh ap mesh cluster configuration

Mesh cluster name :MeshCluster-89
Mesh cluster key  :Manual
AP505H-Lab1#

AP505H-Lab1# sh ap mesh cluster status

Mesh cluster      :Disabled
Mesh role         :Mesh Point
Mesh Split5G Band Range :full
Mesh mobility     :Disabled
AP505H-Lab1#
```

Because these are per AP setting, they'll get saved on the AP environment parameters.

```
AP505H-Lab1# sh ap-env

Antenna Type:Internal
IoT Antenna Type:Internal
Need USB field:Yes
name:AP505H-Lab1
enet0_bridging:1
uap_controller_less:1
mesh-cluster-name:MeshCluster-89
mesh-cluster-key:746c9b89a2059a31575b2977ffa6da8c26b7c336de3f06d5
AP505H-Lab1#
```

We also login to our AP525-Lab1 which is a Mesh portal and configure the same.

```
AP515-Lab1# mesh-cluster-key Aruba123456789
AP515-Lab1# mesh-cluster-name MeshCluster-89
```

Then we'll reload both of them. Once they get rebooted and are online we check the VC which is the AP505H-Lab1 and AP515-Lab1

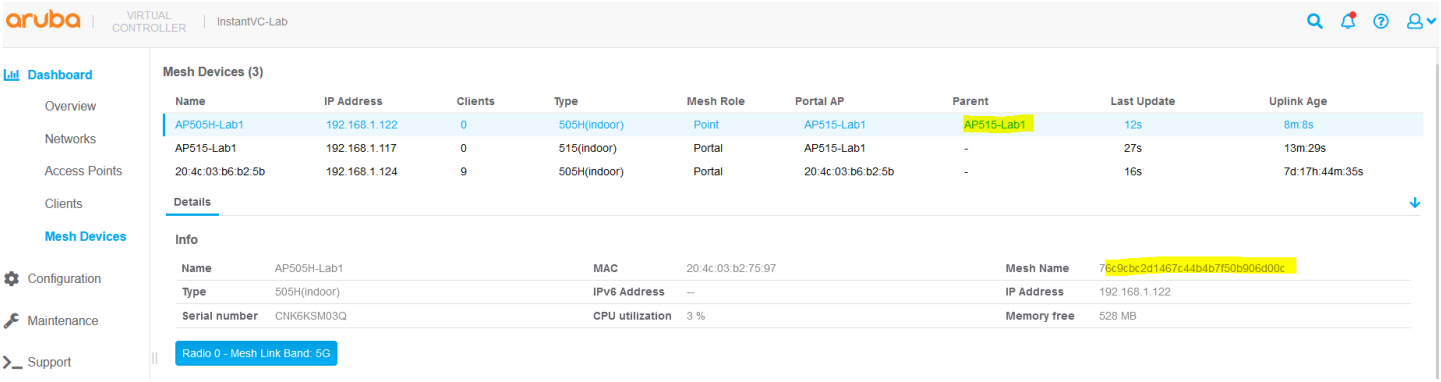

Lets check the mesh topology from the AP505H-Lab1 and AP515-Lab1 APs.

```
AP515-Lab1# sh ap mesh cluster status

Mesh cluster       :Enabled
Mesh cluster name  :MeshCluster-89
Mesh role          :Mesh Portal
Mesh Split5G Band Range :full
Mesh mobility      :Disabled
AP515-Lab1#
```

```
AP505H-Lab1# sh ap mesh cluster status

Mesh cluster       :Enabled
Mesh cluster name  :MeshCluster-89
Mesh role          :Mesh Point
Mesh Split5G Band Range :full
Mesh mobility      :Disabled
AP505H-Lab1#
```

The important thing here is that we now have good predictivity and control for choosing Mesh Points that need to connect to specific Mesh portals. You also have the ability to disable mesh cluster on per IAP basis.

4.2 Multiple Mesh Clusters and Failover

Starting with Instant 8.4.0.0 you can now support multiple mesh clusters. We can do this by manually configuring Mesh cluster name and password. Mesh cluster function is a per-AP setting and must be configured manually. When an IAP boots up, it attempts to find a mesh cluster configuration, if there is a mesh cluster configured then it will use that other wise it'll use the default mesh cluster. Since you can define more than one mesh cluster profile, you can also assign priorities to each cluster profile. This way you can have a recovery or backup cluster profile. This is useful in the initial deployment or if you want to add a backup mesh link.

Here we'll configure a

- manual mesh cluster "MeshCluster-89"
- backup mesh cluster "MeshCluster-90"

So the mesh-point AP (AP505H) will first will use the MeshCluster-89 mesh link and in case it is not avilable it will then switch to MeshCluster-90.

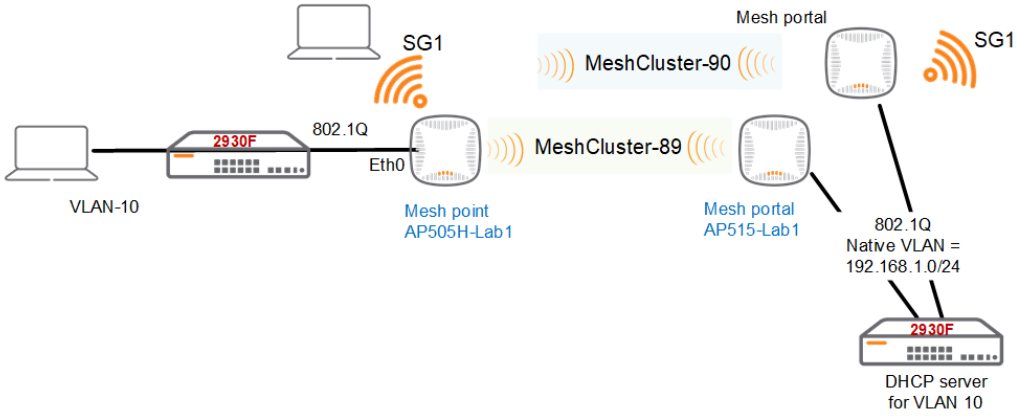

Note that we already have confiugured the mesh cluster "MeshCluster-89", we'll continue with the Instant cluster level configuration of "MeshCluster-90". The only command needed is this.

```
mesh-cluster MeshCluster-90 wpa2-psk 7c47c625a20b3e39056aa159f780fed60385bbbe2f0fd644
priority 1
```

Once you have sames the configuration, that cluster name will be used as a backup to the mesh cluster that was manually configured on the AP515-Lab1 and AP505H-Lab1. Note that the priority for it should only be 1 as highlighted.

Now we'll do the basic checks and then wil test the failover.

The first AP is the VC. Note that there are no manual mesh cluster-89 configured on VC which is our backup mesh-poral AP.

```
20:4c:03:b6:b2:5b# show ap-env

Antenna Type:Internal
Need USB field:Yes
uap_controller_less:1

20:4c:03:b6:b2:5b# show run | incl mesh-cluster
mesh-cluster MeshCluster-90 wpa2-psk e9cb6fe7fc5efe4c5c3b6f86306faa50022727c3895f9608
priority 1

20:4c:03:b6:b2:5b# sh ap mesh cluster configuration

Mesh cluster name :MeshCluster-90
Mesh cluster key  :Manual
20:4c:03:b6:b2:5b#
```

Here are the outputs on AP515-Lab1 which is our primary mesh-portal.

```
AP515-Lab1# sh ap-env

Antenna Type:Internal
Need USB field:Yes
name:AP515-Lab1
uap_controller_less:1
mesh-cluster-name:MeshCluster-89
mesh-cluster-key:7d01c2941ab3854e60a6951fa0b75d4ca6068fee69607806
enet1_mode:uplink

AP515-Lab1# show run | incl mesh-cluster
mesh-cluster MeshCluster-90 wpa2-psk e9cb6fe7fc5efe4c5c3b6f86306faa50022727c3895f9608
priority 1

AP515-Lab1# sh ap mesh cluster configuration

Mesh cluster name :MeshCluster-89
Mesh cluster key  :Manual
AP515-Lab1#
```

And lastly AP505H-Lab1 which is our Mesh point AP.

```
AP505H-Lab1# show ap-env

Antenna Type:Internal
Need USB field:Yes
name:AP505H-Lab1
enet0_bridging:1
uap_controller_less:1
mesh-cluster-name:MeshCluster-89
mesh-cluster-key:5db83aa119840be171fa77906f37fff5886810af793b3dd4

AP505H-Lab1# show running-config | incl mesh-cluster
mesh-cluster MeshCluster-90 wpa2-psk 32b173d7f117a40c4e7bfb9159831b7e8c32f4c6654b2452
priority 1

AP505H-Lab1# show ap mesh cluster configuration

Mesh cluster name :MeshCluster-89
Mesh cluster key  :Manual
AP505H-Lab1#
```

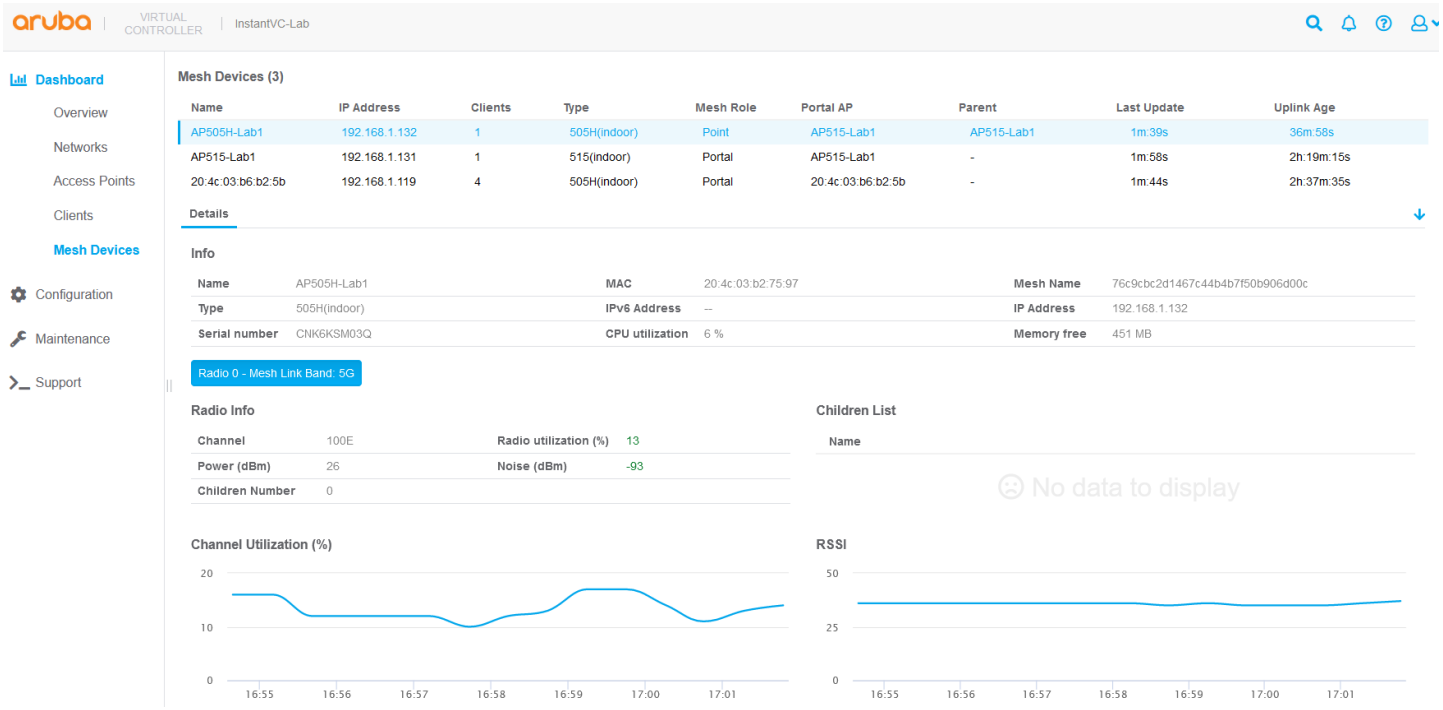

You should also see the VC (backup mesh portal) as a neighbour on mesh point AP.

```
AP505H-Lab1# sh ap mesh neighbours

Neighbor list
-------------
Radio  MAC                AP Name            Portal  Channel  Age  Hops  Cost  Relation
Flags  RSSI  Rate Tx/Rx  A-Req  A-Resp  A-Fail  HT-Details     Cluster ID
-----  ---               -------            ------  -------  ---  ----  ----  ----------
-------        -----  ----  ----------  -----  ------  ------  ----------    ----------
0      9c:8c:d8:12:b3:11  AP515-Lab1         Yes     100E     0    0     1.00  P 34m:28s
ELK    32    1134/1134   4       4       0       HE-80MHz-4ss
76c9cbc2d1467c44b4b7f50b906d00c
0      d0:d3:e0:b2:2a:91  20:4c:03:b6:b2:5b  Yes     100E     0    0     0.00  N 35m:43s
ELK    53    -           0       0       0       HE-80MHz-2ss
3966c305bd519386cb3abaea2c67f4c

Total count: 2, Children: 0
```

```
Relation: P = Parent; C = Child; N = Neighbor; B = Blacklisted-neighbor
Flags: R = Recovery-mode; S = Sub-threshold link; D = Reselection backoff; F = Auth-
failure; H = High Throughput; V = Very High Throughput, E= High efficient, L = Legacy
allowed
        K = Connected; U = Upgrading; G = Descendant-upgrading; Z = Config pending; Y =
Assoc-resp/Auth pending
        a = SAE Accepted; b = SAE Blacklisted-neighbour; e = SAE Enabled; u = portal-
unreachable; o = opensystem; m = Mobility Enabled

AP505H-Lab1#
```

So now we'll power down the AP515-Lab1 to simulate a failure.

```
AP505H-Lab1# sh ap mesh link

Neighbor list
-------------
Radio  MAC  AP Name  Portal  Channel  Age  Hops  Cost  Relation          Flags  RSSI
Rate Tx/Rx  A-Req  A-Resp  A-Fail  HT-Details  Cluster ID
-----  ---  -------  ------  -------  ---  ----  ----  ----------------  -----  ----  --
--------  -----  ------  ------  ----------  ----------

Total count: 0, Children: 0
Relation: P = Parent; C = Child; N = Neighbor; B = Blacklisted-neighbor
Flags: R = Recovery-mode; S = Sub-threshold link; D = Reselection backoff; F = Auth-
failure; H = High Throughput; V = Very High Throughput, E= High efficient, L = Legacy
allowed
        K = Connected; U = Upgrading; G = Descendant-upgrading; Z = Config pending; Y =
Assoc-resp/Auth pending
        a = SAE Accepted; b = SAE Blacklisted-neighbour; e = SAE Enabled; u = portal-
unreachable; o = opensystem; m = Mobility Enabled


AP505H-Lab1# sh ap mesh link

Neighbor list
-------------
Radio  MAC                AP Name           Portal  Channel  Age  Hops  Cost  Relation
Flags  RSSI  Rate Tx/Rx  A-Req  A-Resp  A-Fail  HT-Details    Cluster ID
-----  ---                -------           ------  -------  ---  ----  ----  ----------
-------        -----  ----  ----------  -----  ------  ------  ----------    ----------
0      d0:d3:e0:b2:2a:91  20:4c:03:b6:b2:5b  Yes     100E     0    0     1.00  P 5s
ELK    53    1020/816    1      1       0       HE-80MHz-2ss
3966c305bd519386cb3abaea2c67f4c

Total count: 1, Children: 0
Relation: P = Parent; C = Child; N = Neighbor; B = Blacklisted-neighbor
Flags: R = Recovery-mode; S = Sub-threshold link; D = Reselection backoff; F = Auth-
failure; H = High Throughput; V = Very High Throughput, E= High efficient, L = Legacy
allowed
        K = Connected; U = Upgrading; G = Descendant-upgrading; Z = Config pending; Y =
Assoc-resp/Auth pending
        a = SAE Accepted; b = SAE Blacklisted-neighbour; e = SAE Enabled; u = portal-
unreachable; o = opensystem; m = Mobility Enabled

AP505H-Lab1#
```

Here is the WebUI view. And soon AP515-Lab1 will disappear from the web UI as it is powered down.

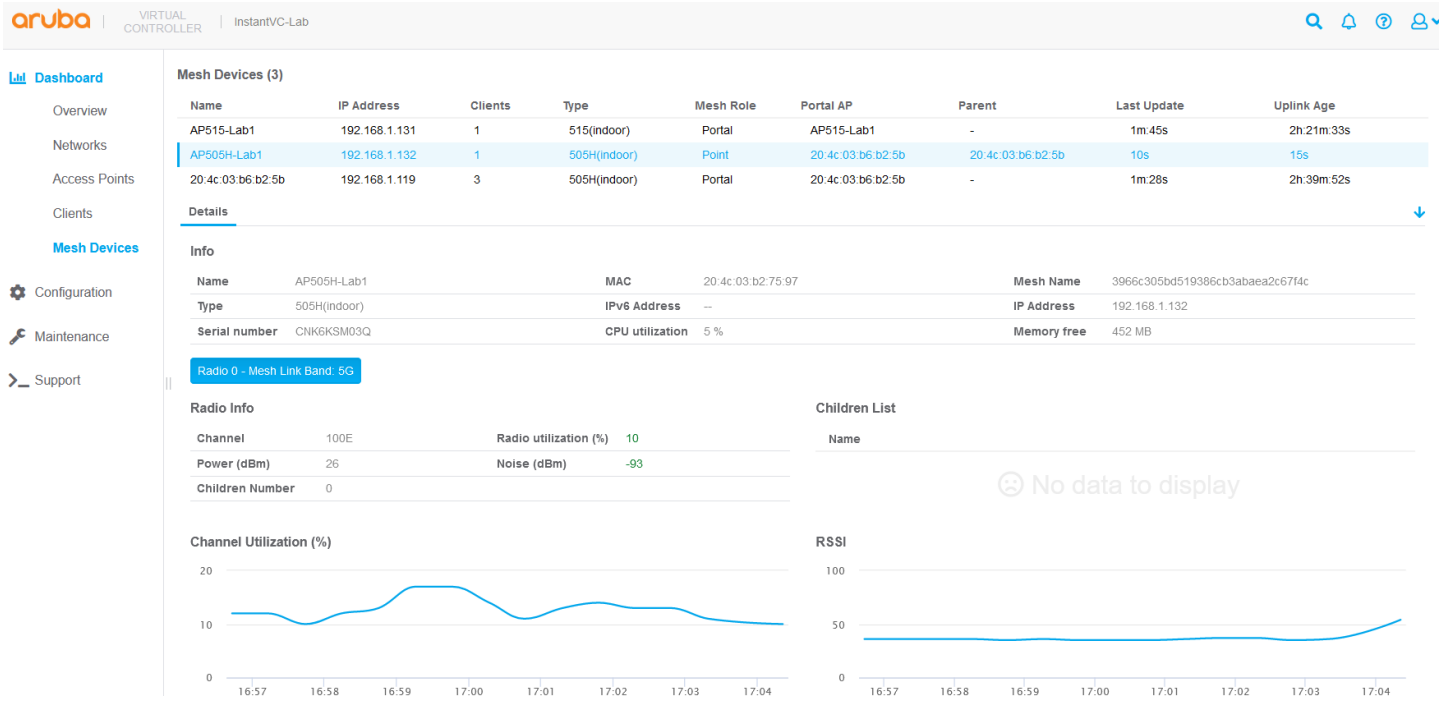

We can also check the mesh debug status that shows which is the active mesh cluster. Note that the manual mesh cluster always has priority of 0.

```
AP505H-Lab1# sh ap mesh debug status

State: CONNECTED(1), since: 2m:44s, recovery: FALSE
Country-code: 31 ("AU"), Outdoor: FALSE
Active Cluster: <3966c305bd519386cb3abaea2c67f4c>, encrypted: TRUE, priority:1
All Available Clusters(2):
 Cluster: <76c9cbc2d1467c44b4b7f50b906d00c>, encrypted: TRUE, priority: 0
 Cluster: <3966c305bd519386cb3abaea2c67f4c>, encrypted: TRUE, priority: 1
Working RF Band: 1, RF Split 5G Range: 0
SM State: CONNECTED, Descendant Upgrading: FALSE, Portal Reachability: TRUE
Topology Adjust Scan: False, Scan Times: 2, Scan Interval: 1000s,
Portal ID: d0:d3:e0:b2:2a:91, Loop Protect Seq NO: 9418, Hop Count: 1, Path Cost: 1,
Portal MTU: 1500,
Metric Reselection State: Idle, Optimize Scan Tick: 164, Reselection Tick: 8, Switch
Interval: 0, Switch Tick: 163,
SAPD Pending: FALSE, Received Config: TRUE, Thermal Protect: FALSE, Reboot Me: FALSE,
Shutting Down: FALSE,
SAPD Radio Off Tick: 0, FIPS Change Tick: 0, LMS change Tick: 0, LMS IP: 192.168.1.119,
Mesh Ctrl Socket: 13, Hostapd Recreate Pending: FALSE, Hostapd PID: 8156, Hostapd Sent
Config: TRUE, Hostapd Sync Count: 0,
Supplicant Initted: 1,
Mesh Radios Status:
 Radio 0, Phy Down: FALSE, Band: 1, Current Channel: 100/0,
  Total 31 channels:
34,36,38,40,42,44,46,48,52,56,60,64,100,104,108,112,116,120,124,128,132,136,140,144,149,1
53,157,161,165,169,173,

  Scan Active: FALSE, Scan Started 179 Ticks, Scanned 31 channels, Curring Scanning
Channel 34,
  Schedule Renegotiate: 0, Renegotiate: 0, Authenticate Pending: 0, Assoc Pending: 0,
Assoc Tick: 2585, WPA Auth Pending 0,
  Marginal Uplink: FALSE, Hop Count: 1, Past Cost CH: 100, Path Cost: 1, Children Num: 0,
Node Cost: 0, Subtree Weight: 0,
  Commit Pending: 0, Mesh_P VAP Up: TRUE, Point Radar Tick: 0, Radar Channel: 0,
  Supplicant EAPOL Socket: 14, VAP Added: 1, VAP Name: aruba000, MAC 70:00:00:00:00:00,
BSSID d0:d3:e0:b2:2a:91, SSID 3966c305bd519386cb3abaea2c67f4c, KEY MGMT 1
Mesh Configurations:
```

```
  Max children: 8, Max Hop Count: 2, Heartbeat Threshold: 10, Roaming: FALSE/RSSI-limit
0, Prefer Uplink Radio: No prefer uplink radio, Remote Mesh MPV: 0
  Metric Algorithm: Distribute Tree RSSI, Reselection Mode: Anytime, Optimize Scan
Interval: 86400(s), Link Threshold: 20, Max RSSI: 46, RSSI Delta: 2, Penalty: 10, Offset:
0
  HT Enabled: 1, VHT Enabled: 1, HE Enabled: 1, 40M: 1, 80M: 1, 160M: 1
  Mesh Access List Type: Deny, Hostname list(0):

AP505H-Lab1#
```

You can also check the meshd-log to see the switch over.

```
AP505H-Lab1# sh ap mesh debug meshd-log 0

[6397]2021-11-29 17:04:09.597 meshd_set_active_profile:3840 set meshd_hostapd_ready_flag
FALSE
[6397]2021-11-29 17:04:09.597 meshd_set_active_profile:3844 call meshd_hostapd_ready
[6397]2021-11-29 17:04:09.597 meshd_hostapd_ready:4698 syncing up with hostapd
[6397]2021-11-29 17:04:09.597 Sending cmd to hostapd:CONFIG  /- - -
RecoveryClusterProfile *** ***
[6397]2021-11-29 17:04:09.598 meshd_hostapd_recv: recv-err:No such file or directory
[6397]2021-11-29 17:04:09.598 meshd_hostapd_ready:4700 set meshd_hostapd_ready_flag TRUE
[6397]2021-11-29 17:04:09.598 meshd_scan_complete_all: Switching active profile to
3966c305bd519386cb3abaea2c67f4c
[6397]2021-11-29 17:04:09.599 meshd_program_active_profile: set meshc VAP ssid to
3966c305bd519386cb3abaea2c67f4c
[6397]2021-11-29 17:04:09.607 meshd_program_active_profile: Adding supplicant iface phy=0
[6397]2021-11-29 17:04:09.690 aruba000: deleting key mac=00:00:00:00:00:00 key_id=0
[6397]2021-11-29 17:04:09.690 aruba000: deleting key mac=00:00:00:00:00:00 key_id=1
[6397]2021-11-29 17:04:09.691 aruba000: deleting key mac=00:00:00:00:00:00 key_id=2
[6397]2021-11-29 17:04:09.691 aruba000: deleting key mac=00:00:00:00:00:00 key_id=3
[6397]2021-11-29 17:04:09.692 meshd_supplicant_interface_add,463, supplicant interface
added.

[6397]2021-11-29 17:04:09.692 meshd_scan_complete_all: candidates:1, profiles:2,
recovery:FALSE, num_scans 2, disconnected-time: 13(secs)
```

Now when the AP515-Lab1 is powered up, the mesh-point will not automatically change the current mesh link back to it. By default, Optimize scan internal is set to 24 hours and we can reduce the scan internal to minimum one hour.

```
# show ap mesh config

A Tx Rates                :6,9,12,18,24,36,48,54
Heartbeat Threshold       :10
Link Threshold            :12
Metric Algorithm          :Metric_Distributed_Tree_Rssi
Max Children              :8
Max Hop Count             :2
Mesh Private Vlan         :0
Reselection Mode          :Reselect_Startup_Subthreshold
Prefer Uplink Radio       :No prefer uplink radio
Optimize Scan Interval    :24
Retry Limit               :4
Mobility Beacon Miss Num  :16
```

After 1 hour the mesh point starts to re-scan, it reselects parent only depends on better RSSI metrics, not the priority.

Now if it's a must that mesh point has to connect back to the original mesh portal, in our case AP515-Lab1, then we need to enable preferred conductor. So now when the AP515-Lab1 comes up then the previous VC that was the AP portal will reboot which would force the point to connect to the AP515-Lab1.

4.3 Mesh Radio selection

Generally 5GHz radio wil lbe used for mesh links but for the APs with dual 5GHz radios, you can specificy either to use both 5GHz radios or split them. Refer to the user guide for details.

You need to be aware of this command.

```
mesh-split5g-range-band { full | lower | upper | first }
```

Also note that the AP must be rebooted for the configuration to take effect.

4.4 Mesh Links and Fast Roaming

This feature is usedful in some moving environment where you don't need sub-second roaming for APs deployed in a wireless mesh network. To support fast roaming, mobility mesh points perform a scan of other mesh points in the background first and then choose the best neighbor to connect from all the neighbors. The background scan implies when mesh is connected, the mesh point collects information about surrounding channels through background scanning. The mobility mesh point scan time between radio channels is altered to be faster than the mesh point scan in a regular mesh network.

Here is the mesh cluster status

```
AP505H-Lab1# sh ap mesh cluster status

Mesh cluster      :Enabled
Mesh cluster name :MeshCluster-89
Mesh role         :Mesh Point
Mesh Split5G Band Range :full
Mesh mobility     :Disabled

AP505H-Lab1#
```

You need the following on the mesh point AP. The choises are mesh-mobility [high|low|<number>]

```
AP505H-Lab1# mesh-mobility high

AP505H-Lab1# sh ap mesh cluster status

Mesh cluster      :Enabled
Mesh cluster name :MeshCluster-89
Mesh role         :Mesh Point
Mesh Split5G Band Range :full
Mesh mobility     :Enabled

AP505H-Lab1#
```

The options for mesh-mobility commands are:

- high Enables mesh roaming function and RSSI threshold less than or equal to 22
- low Enables mesh roaming function and RSSI threshold less than or equal to 15.
- <number> Enables mesh roaming function and RSSI is set as a definite value. Range: 10-50

Once you have enabled mesh mobility, that should show up in the mesh link flags.

```
AP515-Lab1# sh ap mesh link

Neighbor list
-------------
Radio  MAC                AP Name      Portal             Channel  Band  Age  Hops  Cost  Relation
Flags  RSSI  Rate Tx/Rx  A-Req  A-Resp  A-Fail  HT-Details       Cluster ID
-----  ---               -------      ------             -------  ----  ---  ----  ----  ---------
--------        -----  ----  ----------  -----  ------  ------  ----------
0      d0:d3:e0:b2:41:70  AP505H-Lab1  9c:8c:d8:12:b3:11  52       5GHz  0    1     1.00  C 16m:7s
ELmK   42    1134/1134   4      4       0       HE-20MHzsgi-2ss  76c9cbc2d1467c44b4b7f50b906d00c

Total count: 1, Children: 1
Relation: P = Parent; C = Child; N = Neighbor; B = Denylisted-neighbor
Flags: R = Recovery-mode; S = Sub-threshold link; D = Reselection backoff; F = Auth-failure; H =
High Throughput; V = Very High Throughput, E= High efficient, L = Legacy allowed
        K = Connected; U = Upgrading; G = Descendant-upgrading; Z = Config pending; Y = Assoc-
resp/Auth pending
```

```
        a = SAE Accepted; b = SAE Denylisted-neighbour; e = SAE Enabled; u = portal-unreachable; o
= opensystem; m = Mobility Enabled

AP515-Lab1#
```

4.5 Mesh Fine Tuning

Here are the default mesh parameters that are used. You don't need to changed it in most of the cases.

```
20:4c:03:b6:b2:5b# sh ap mesh config

A Tx Rates                 :6,9,12,18,24,36,48,54
Heartbeat Threshold        :10
Link Threshold             :12
Metric Algorithm           :Metric_Distributed_Tree_Rssi
Max Children               :8
Max Hop Count              :2
Mesh Private Vlan          :0
Reselection Mode           :Reselect_Startup_Subthreshold
Prefer Uplink Radio        :No prefer uplink radio
Optimize Scan Interval     :24
Retry Limit                :4
Mobility Beacon Miss Num   :16
```

However here we are changing a few of them. You need to make these chages through the CLI.

```
wlan mesh-profile
 reselection-mode anytime
 optimize-scan-interval 1
 link-threshold 20
 max-retries 2
20:4c:03:b6:b2:5b# sh ap mesh config

A Tx Rates                 :6,9,12,18,24,36,48,54
Heartbeat Threshold        :10
Link Threshold             :20
Metric Algorithm           :Metric_Distributed_Tree_Rssi
Max Children               :8
Max Hop Count              :2
Mesh Private Vlan          :0
Reselection Mode           :Reselect_Anytime
Prefer Uplink Radio        :No prefer uplink radio
Optimize Scan Interval     :1
Retry Limit                :2
Mobility Beacon Miss Num   :16
20:4c:03:b6:b2:5b#
```

4.6 Show Cluster Commands

There are a few interesting show commands that need to be excuted form the VC.

"Show ap mesh cluster active" provide the active mesh clusters.

```
20:4c:03:b6:b2:5b# sh ap mesh cluster active

Mesh Cluster name: 76c9cbc2d1467c44b4b7f50b906d00c
-------------------------------------------------
Name         AP Type  Mesh Role  IP Address     Portal AP   Parent AP   RSSI  Last Update  Uplink Age  Children Num  Children List
----         -------  ---------  ----------     ---------   ---------   ----  -----------  ----------  ------------  -------------
AP505H-Lab1  AP-505H  Point      192.168.1.122  AP515-Lab1  AP515-Lab1  41    2m:5s        14m:45s     0             -
AP515-Lab1   AP-515   Portal     192.168.1.117  AP515-Lab1  -           0     2m:0s        20m:8s      1             AP505H-Lab1

Total APs: 2
(N): 11N Enabled. (AC): 11AC Enabled. (AD): 11AD Enabled. (AX): 11AX Enabled. For Portals 'Uplink Age' equals uptime.


Mesh Cluster name: b4afc01b0ce08dcc578432086842f21
-------------------------------------------------
Name              AP Type  Mesh Role  IP Address     Portal AP          Parent AP  RSSI  Last Update  Uplink Age     Children Num  Children List
----              -------  ---------  ----------     ---------          ---------  ----  -----------  ----------     ------------  -------------
20:4c:03:b6:b2:5b  AP-505H  Portal     192.168.1.124  20:4c:03:b6:b2:5b  -          0     1m:42s       9d:22h:53m:9s  0             -

Total APs: 1
(N): 11N Enabled. (AC): 11AC Enabled. (AD): 11AD Enabled. (AX): 11AX Enabled. For Portals 'Uplink Age' equals uptime.


20:4c:03:b6:b2:5b#
```

From the above output ou can get the IP addresses of the mesh points and portals and then execute the stats command.

Here is the mesh-point AP.

```
20:4c:03:b6:b2:5b# sh ap mesh cluster stats 192.168.1.122

Radio ID : 0
Mesh link on radio : Yes
Mesh link band : 5G
Children Num : 0
Children List : -
Metrics stats:
--------------
Timestamp  RSSI  Channel Utilization (%)  Goodput [Tx] (bps)  Goodput [Rx] (bps)  Throughput [Tx] (bps)
Throughput [Rx] (bps)
---------  ----  -----------------------  ------------------  ------------------  ---------------------  --------
--------------
15:23:15   41    3                        35563849            831507331           4392                   9337
15:22:44   43    2                        33375266            834958904           4126                   10041
15:22:14   43    3                        34330935            820579710           4401                   11190
15:21:44   44    2                        35242455            808572748           4461                   11531
15:21:13   42    2                        35397050            829784615           4270                   8885
15:20:43   41    2                        34970526            818845481           4378                   9253
15:20:12   43    3                        34546192            829770897           4483                   8827
15:19:42   41    3                        35834817            820960000           4359                   9435
15:19:11   44    3                        34250770            827977142           4365                   9491
15:18:41   40    2                        34319198            825813953           4396                   9353
15:18:10   43    2                        34944340            828298136           4316                   8773
15:17:40   44    3                        36101511            831319148           4404                   9008
15:17:09   43    3                        35223435            831000000           4358                   9200
15:16:39   43    3                        35377729            838690058           4317                   9438
15:16:08   41    2                        34126582            827893175           4529                   9190

Radio ID : 1
Mesh link on radio : No

Radio ID : 2
Mesh link on radio : No

20:4c:03:b6:b2:5b#
```

And the Mesh portal AP.

```
20:4c:03:b6:b2:5b# sh ap mesh cluster stats 192.168.1.117

Radio ID : 0
Mesh link on radio : Yes
Mesh link band : 5G
Children Num : 1
Children List : AP505H-Lab1
Metrics stats:
--------------
Timestamp  RSSI  Channel Utilization (%)  Goodput [Tx] (bps)  Goodput [Rx] (bps)  Throughput [Tx] (bps)
Throughput [Rx] (bps)
---------  ----  -----------------------  ------------------  ------------------  ---------------------  --------
--------------
15:22:52   0     2                        22262677            768156097           6984                   5241
15:22:22   0     2                        21248095            766070351           8076                   5074
15:21:52   0     2                        20682120            757319587           8165                   4889
15:21:22   0     2                        20561531            771569230           6005                   5007
15:20:52   0     2                        21758347            764179104           6590                   5110
```

```
15:20:22   0     2                         21669650            773832512           6205                5228
15:19:52   0     2                         21776488            762857142           6498                4976
15:19:21   0     3                         20749054            767437185           6940                5083
15:18:52   0     2                         21300270            772000000           6804                5138
15:18:21   0     2                         21726904            765532338           6418                5121
15:17:51   0     3                         21759162            767437185           6362                5083
15:17:22   0     2                         21431013            775402985           6426                5187
15:16:52   0     2                         21297996            767437185           6579                5082
15:16:22   0     3                         21005827            764271844           6358                5239
15:15:52   0     3                         21196548            757500000           5969                4841

Radio ID : 1
Mesh link on radio : No

Radio ID : 2
Mesh link on radio : No
20:4c:03:b6:b2:5b#
```